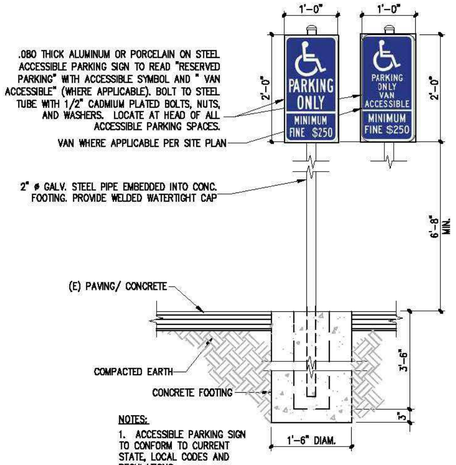

NOTES:
1. ACCESSIBLE PARKING SIGN TO CONFORM TO CURRENT STATE, LOCAL CODES AND REGULATIONS

ACCESSIBLE PARKING SIGN

SCALE: NOT TO SCALE (5)

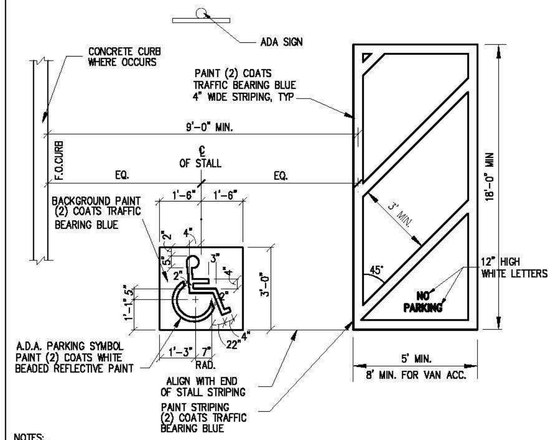

NOTES:
1. PAINT WITH (2) COATS TRAFFIC BEARING PAINT, DRY BETWEEN COATS.
2. MINIMUM VERTICAL CLEARANCE IS 98" IN PARKING STRUCTURE (NO VALET PARKING)

PAINTED ACCESSIBLE PARKING EMBLEM AND STRIPING

SCALE: NOT TO SCALE (4)

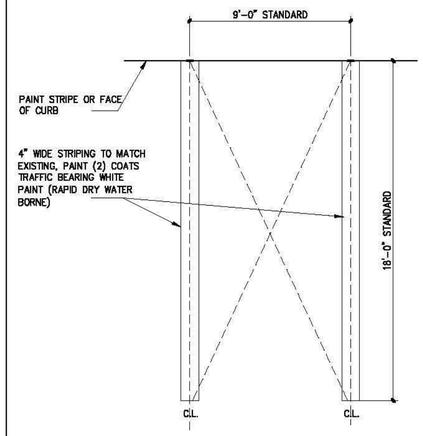

PARKING STRIPING

SCALE: NOT TO SCALE (3)

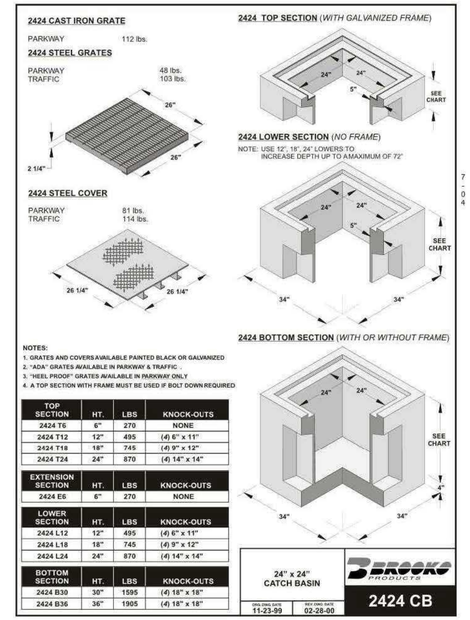

NOTES:
1. GRATES AND COVERS AVAILABLE PAINTED BLACK OR GALVANIZED
2. "ADA" GRATES AVAILABLE IN PARKWAY & TRAFFIC
3. "HEEL PROOF" GRATES AVAILABLE IN PARKWAY ONLY
4. A TOP SECTION WITH FRAME MUST BE USED IF BOLT DOWN REQUIRED

TOP SECTION	HT.	LBS	KNOCK-OUTS
2424 T6	6"	270	NONE
2424 T12	12"	495	(4) 6" x 11"
2424 T18	18"	745	(4) 9" x 12"
2424 T24	24"	870	(4) 14" x 14"

EXTENSION SECTION	HT.	LBS	KNOCK-OUTS
2424 E6	6"	270	NONE

LOWER SECTION	HT.	LBS	KNOCK-OUTS
2424 L12	12"	495	(4) 6" x 11"
2424 L18	18"	745	(4) 9" x 12"
2424 L24	24"	870	(4) 14" x 14"

BOTTOM SECTION	HT.	LBS	KNOCK-OUTS
2424 B30	30"	1595	(4) 18" x 18"
2424 B36	36"	1905	(4) 18" x 18"

24" X 24" CATCH BASIN DETAIL

SCALE: NOT TO SCALE (2)

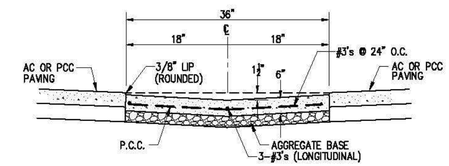

36" WIDE VALLEY GUTTER

SCALE: NOT TO SCALE (1)

12" TRENCH DRAIN DETAIL

SCALE: NOT TO SCALE (6)

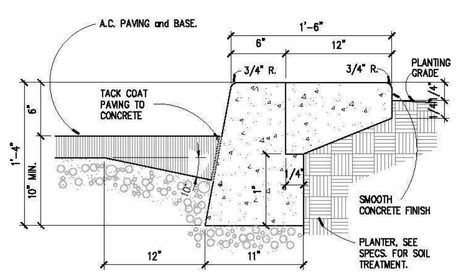

12' WIDE "STEP-OFF" CONCRETE

SCALE: NOT TO SCALE (7)

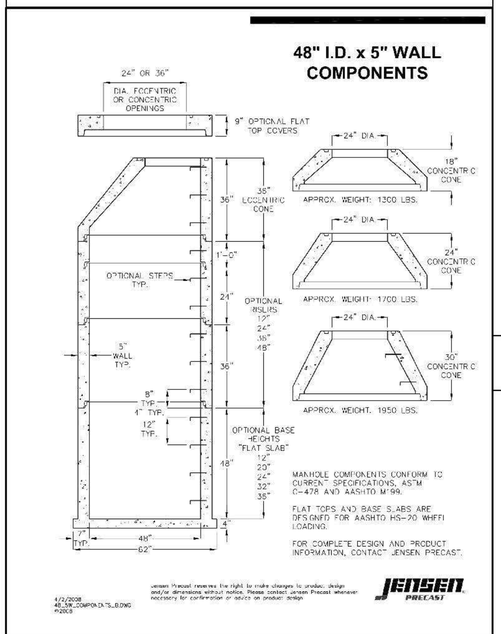

48" DIA. CONCRETE MANHOLE

SCALE: NOT TO SCALE (8)

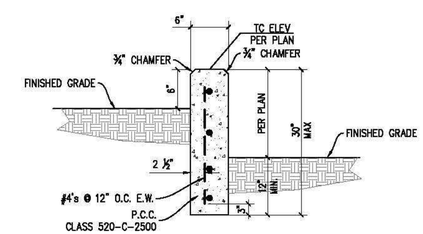

RETAINING CURB DETAIL

SCALE: NOT TO SCALE (9)

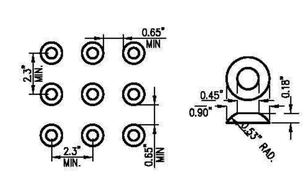

DOMES ARE TO BE INSERTABLE PANEL TYPE, COLORED A CONTRASTING HIGH VISIBILITY YELLOW. ARMOR-TILE MODEL #ADA-S-3548 OR APPROVED EQUAL TO BE USED.

TRUNCATED DOME DETAIL

SCALE: NOT TO SCALE (10)

DIGALERT
DIAL BEFORE YOU DIG — TWO WORKING DAYS BEFORE YOU DIG
TOLL FREE 1-800-227-2600
A PUBLIC SERVICE BY UNDERGROUND SERVICE ALERT

BENCHMARK 603-60-68
ELEVATION 819.687 FT
DATUM
LOCATION
-

BASIS OF BEARINGS
THE BASIS OF BEARING IS AN ASSUMED BEARING OF N88°58'21"E ALONG THE CENTERLINE OF TWO BUNCH PALMS TRAIL WEST OF THE INTERSECTION WITH PALM DRIVE.

ENGINEER MARK	BY	DATE	REVISIONS	CITY APPR.	DATE

DESIGNED BY
DRAWN BY
CHECKED BY
REVISED ON

ENGINEERS SEAL
REGISTERED PROFESSIONAL ENGINEER — KURT M. SAXON — NO. 44180 Exp. 6/30/19 — CIVIL — STATE OF CALIFORNIA

PREPARED BY:
saxonengineering
SAXON ENGINEERS SERVICES, INC
2605 TEMPLE HEIGHTS DRIVE, SUITE A, OCEANSIDE, CA 92056
TEL: 949.388.2180 FAX: 800.663.4193

PREPARED UNDER THE DIRECT SUPERVISION OF:
DATE:
KURT M. SAXON RCE#44180 EXP. 06/30/19

CITY OF DESERT HOT SPRINGS
DEPARTMENT OF PUBLIC WORKS

APPROVED BY:
DANIEL PORRAS, COMMUNITY DEVELOPMENT DIRECTOR DATE:
KAMAL McHANTAF, INTERIM CITY ENGINEER DATE:

CITY OF DESERT HOT SPRINGS

DETAIL SHEET

PARCEL MAP No. 37571 - GROCERY STORE
PALM DRIVE, DESERT HOT SPRINGS
COUNTY OF RIVERSIDE, CA

SHEET 7 OF 9
PRIVATE REFERENCE #
CITY REFERENCE #